网站二维码

电子画册

狼腾广告设计承印/13586836982

宁波震兴汽配有限公司
NINGBO ZHENXING AUTO PARTS CO., LTD.

地址：宁波市奉化区江口街道姜家村南渡路88号
Add：No.88 Nandu Road, Jiangjia Village, Jiangkou Street, Fenghua District, Ningbo City
电话/Tel：0574-59559806
网址/http://www.nbzxqp.com
邮箱/E-mail：Zxqp7726@163.com
手机/MP：**韩总** 13627910281　　**李总** 15906598216

扫一扫 加微信

扫一扫 加微信

震兴汽配
ZHENXING AUTO PARTS

减震器活塞杆
SHOCK ABSORBER PISTON ROD

宁波震兴汽配有限公司
NINGBO ZHENXING AUTO PARTS CO., LTD.

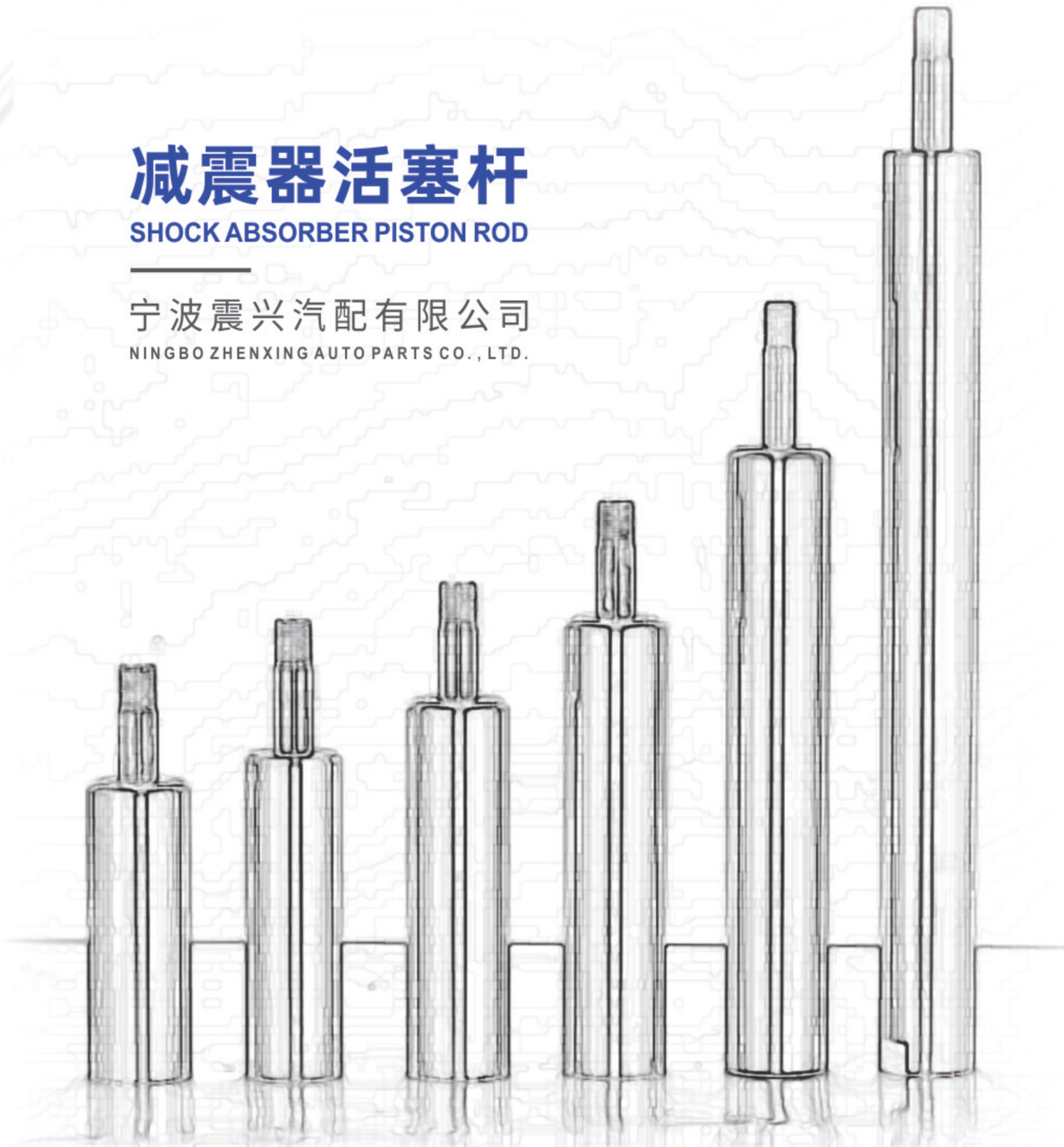

公司简介
Company Profile

宁波震兴汽配有限公司是一家专业从事汽车减震器活塞杆设计、制造、加工和销售为一体的企业，公司位于现代化国际港口城市--浙江省宁波市，公司产品涵盖了多种车型的活塞杆、合金铝活塞杆、电机用活塞杆等，是具有一定规模和竞争力的活塞杆生产厂家之一。

公司在技术研发方面不断投入，致力于解决活塞杆在使用过程中容易出现的缺陷问题，提升产品的稳定性和寿命。此外，公司产品的高效率和环保性也深受客户的好评。

我们非常注重客户服务，在为客户提供高质量的产品的同时，也提供了全面的售后服务，确保客户在使用中没有后顾之忧。公司与国内外多家汽车制造企业建立了长期的合作关系，凭借其优秀的产品和服务质量，赢得了广大客户的信赖和支持。

Ningbo Zhenxing Auto Parts Co., Ltd. is a professional enterprise engaged in the design, manufacturing, processing, and sales of piston rods for automotive shock absorbers. The company is located in the modern international port city of Ningbo, Zhejiang Province. The company's products cover various types of piston rods, alloy aluminum piston rods, motor piston rods, etc. It is one of the piston rod manufacturers with a certain scale and competitiveness.

The company has continuously invested in technological research and development, committed to solving the defects that are prone to occur during the use of piston rods, ensuring the stability and lifespan of the products. In addition, the company's products are highly praised by customers for their high efficiency and environmental friendliness.

We attach great importance to customer service, providing customers with high-quality products while also providing comprehensive after-sales service to ensure that customers have no worries during use. The company has established long-term cooperative relationships with multiple domestic and foreign automobile manufacturing enterprises, and has won the trust and support of a large number of customers with its excellent product and service quality.



公司荣誉
Corporate Honors

多年来
我们重视产品的创新，视产品质量为生命，
在全体员工的不断努力下，
公司收获了许多荣誉！









车间设备
Workshop Equipment



数控车间 CNC workshop



数控车间 CNC workshop



磨床车间 Grinding machine workshop

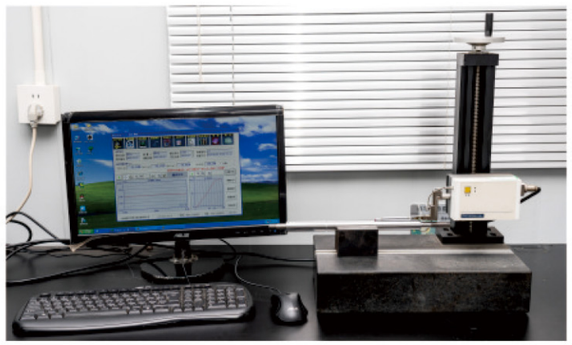

粗糙度仪 Roughness tester

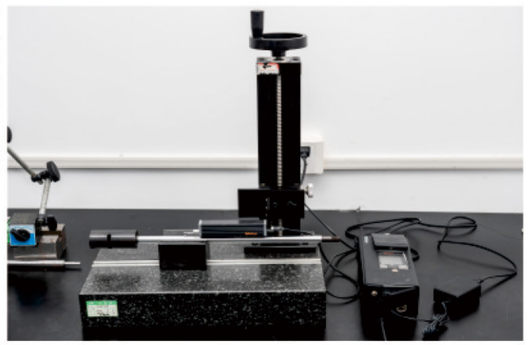

粗糙度仪 Roughness tester

车间设备
Workshop Equipment



投影仪/维氏硬度仪Projector/Vickers hardness tester

洛氏硬度仪、维氏硬度仪，用来检测：淬火硬度，电镀层硬度，微裂纹检测
Rockwell hardness tester and Vickers hardness tester used to detect quenching hardness, hardness of electroplated coating and micro-crack detection



洛氏硬度仪
Rockwell hardness tester

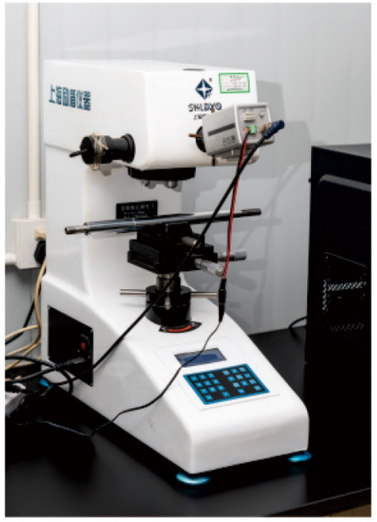

维氏硬度仪
Vickers hardness tester



万能试验机
Universal testing machine

倒插式减震器活塞杆
Inverted shock absorber piston rod



倒插式减震器内杆
Inverted shock absorber inner rod



倒插式减震器活塞杆（路虎极光，XTS，ATS）
Inverted shock absorber piston rod (Land Rover Evoque, XTS, ATS)



磁流变式减震器活塞杆
Magnetorheological shock absorber piston rod





改装车空心杆
Modified vehicle hollow rod





镀钛活塞杆
Modified vehicle hollow rod





绞牙单筒活塞杆

Twisted single cylinder piston rod





绞牙双筒活塞杆

Twisted double cylinder piston rod





摩托车、座椅活塞杆
Motorcycle, seat piston rod



摩托车、座椅可调减震器活塞杆
Motorcycle, seat adjustable shock absorber piston rod



上下可调改装车活塞杆整套
Upper and lower adjustable piston rod of refitted vehicle



雷克萨斯活塞杆
Lexus piston rod

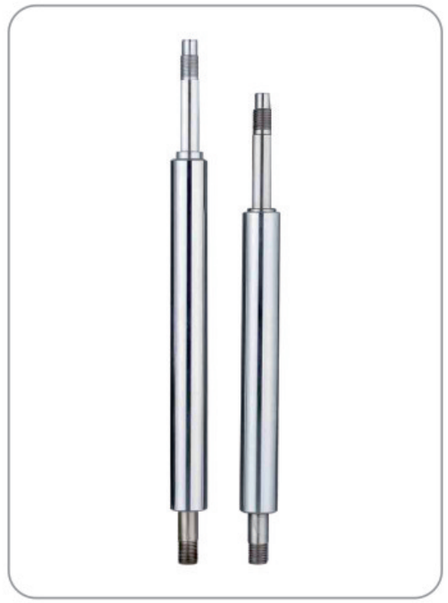

液压车、叉车活塞杆
Piston rod of hydraulic truck and forklift



正常活塞杆、半空心活塞杆
Normal piston rod, semi-hollow piston rod





阀杆
valve stem



调节阀配件
Regulating valve accessories



